PCG-FR55G/FR55R/FR77G
PCG-FRV31/FRV33/FRV34/FRV35/FRV35Q/FRV37/FR870/FR872
PCG-FR315B/FR315M/FR315S/FR395EP
PCG-FR820/FR820C/FR820L/FR820S/FR825CP/FR825L/FR825P/FR825SP

SERVICE MANUAL

Ver 5-2004G

Revision History

Area	Model	Line up	
Japanese	Japanese	PCG-FR55G PCG-FR55G/B PCG-FR55R/P PCG-FR77G/B	 2 [MA] 3 [MA]
American	US Canadian	PCG-FRV31 PCG-FRV33 PCG-FRV34 PCG-FRV35 PCG-FRV37	2 [MA] 3 [MA]
	Quebec	PCG-FRV35Q	2 [MA]
	Latin	PCG-FR870 PCG-FR872	2 [MA] 2 [MA]
European	AEP UK	PCG-FR315B PCG-FR315M PCG-FR315S PCG-FR395EP	
Asian/Oceania/ South Africa	International	PCG-FR820 PCG-FR825P	2 [MA] 2 [MA]
	Korean	PCG-FR820L PCG-FR825L	2 [MA] 2 [MA]
	Thai	PCG-FR820S PCG-FR825SP	2 [MA] 2 [MA]
	Chinese	PCG-FR820C PCG-FR825CP	3 [MA] 3 [MA]

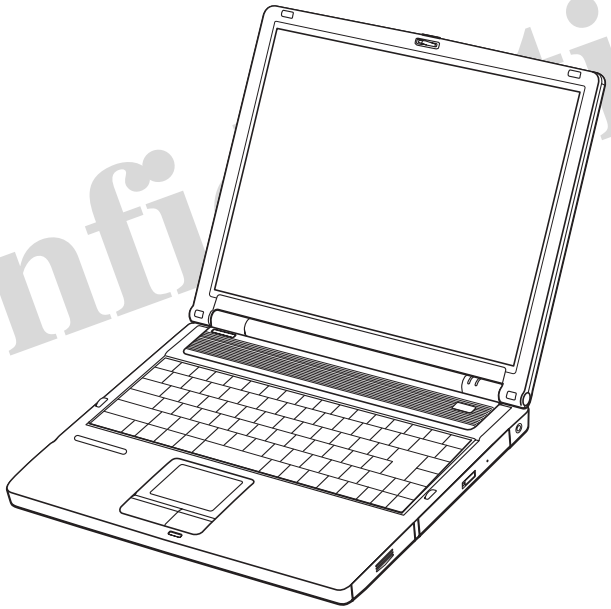

Illust : PCG-FR77G/B

Confidential

i™ S400

MEMORY STICK™

VAIO

- Design and specifications are subject to change without notice.
- 本機の仕様および外観は，改良のため予告なく変更することがありますが，ご了承ください。

NOTEBOOK COMPUTER

SONY®

9-876-342-05

Information in this document is subject to change without notice.

Sony, VAIO and CLIE are trademarks or registered trademarks of Sony. Microsoft, Windows, Windows Media, Outlook, Bookshelf and other Microsoft products are trademarks or registered trademarks
of Microsoft Corporation in the United States and other countries.
The word Bluetooth and the Bluetooth logo are trademarks of Bluetooth SIG, Inc. AMD, AMD logo, AMD Duron and combinations thereof, 3DNow!, are trademarks of Advanced Micro Devices, Inc. Intel Inside logo, Pentium and Celeron are trademarks or registered trademarks of Intel Corporation. Transmeta, the Transmeta logo, Crusoe Processor, the Crusoe logo and combinations thereof are trademarks of Transmeta Corporation in the USA and other countries. Graffiti, HotSync, PalmModem, and Palm OS are resistered trademarks, and the Hotsync logo and Palm are trademarks of Palm, Inc. or its subsidiaries. (M) and Motrola are trademarks of Motrora, Inc. Other Motrola products and services with (R) mark like Dragomball are the trademarks of Motrola, Inc.

All other names of systems, products and services in this manual are trademarks or registered trademarks of their respective owners.
In this manual, the (TM) or (R) mark are not specified.

Caution Markings for Lithium/Ion Battery - The following or similar texts shall be provided on battery pack of equipment or in both the operating and the service instructions.

CAUTION: Danger of explosion if battery is incorrectly replaced. Replace only with the same or equivalent type recommended by the manufacturer. Discard used batteries according to the manufacturer's instructions.

CAUTION: The battery pack used in this device may present a fire or chemical burn hazard if mistreated. Do not disassemble, heat above 100°C (212°F) or incinerate.
Dispose of used battery promptly.
Keep away from children.

CAUTION: Changing the back up battery.
- Overcharging, short circuiting, reverse charging, multilation or incineration of the cells must be avoided to prevent one or more of the following occurrences; release of toxic materials, release of hydrogen and/or oxygen gas, rise in surface temperature.
- If a cell has leaked or vented, it should be replaced immediately while avoiding to touch it without any protection.

Service and Inspection Precautions

1. Obey precautionary markings and instructions

Labels and stamps on the cabinet, chassis, and components identify areas requiring special precautions. Be sure to observe these precautions, as well as all precautions listed in the operating manual and other associated documents.

2. Use designated parts only

The set's components possess important safety characteristics, such as noncombustibility and the ability to tolerate large voltages. Be sure that replacement parts possess the same safety characteristics as the originals. Also remember that the ⚠ mark, which appears in circuit diagrams and parts lists, denotes components that have particularly important safety functions; be extra sure to use only the designated components.

3. Always follow the original design when mounting parts and routing wires

The original layout includes various safety features, such as inclusion of insulating materials (tubes and tape) and the mounting of parts above the printer board. In addition, internal wiring has been routed and clamped so as to keep it away from hot or high-voltage parts. When mounting parts or routing wires, therefore, be sure to duplicate the original layout.

4. Inspect after completing service

After servicing, inspect to make sure that all screws, components, and wiring have been returned to their original condition. Also check the area around the repair location to ensure that repair work has caused no damage, and confirm safety.

5. When replacing chip components...

Never reuse components. Also remember that the negative side of tantalum capacitors is easily damaged by heat.

6. When handling flexible print boards...

- The temperature of the soldering-iron tip should be about 270C.
- Do not apply the tip more than three times to the same pattern.
- Handle patterns with care; never apply force.

Caution: Remember that hard disk drives are easily damaged by vibration. Always handle with care.

ATTENTION AU COMPOSANT AYANT RAPPORT À LA SÉCURITÉ!
LES COMPOSANTS IDENTIFÉS PAR UNE MARQUE ⚠ SUR LES DIAGRAMMES SCHÉMATIQUES ET LA LISTE DES PIÈCES SONT CRITIQUES POUR LA SÉCURITÉ DE FONCTIONNEMENT. NE REMPLACER CES COMPOSANTS QUE PAR DES PIÈSES SONY DONT LES NUMÉROS SONT DONNÉS DANS CE MANUEL OU DANS LES SUPPÉMENTS PUBLIÉS PAR SONY.

Confidential

TABLE OF CONTENTS

Section	Title	Page
CHAPTER 1.	**SPECIFICATIONS**	1-1 (to 1-1)
CHAPTER 2.	**BLOCK DIAGRAM**	2-1 (to 2-1)
CHAPTER 3.	**FRAME HARNESS DIAGRAM**	3-1 (to 3-1)
CHAPTER 4.	**EXPLODED VIEWS AND PARTS LIST**	
Palmrest		
P-1		4-2
Bottom		
B-1		4-3
Main Board		
M-1		4-4
LCD		
L-1. 15-inch XGA (Clear Black) – Made by HI –		4-5
L-2. 15-inch XGA – Made by AU –		4-6
L-3. 15-inch XGA (High Brightness) – Made by SH –		4-7
Accessory		
A-1		4-8
DIP Switch		4-9 (to 4-9)
CHAPTER 5.	**OTHERS**	
5-1.	The Barcode Label	5-1
5-2.	Replacing the CPU	5-2
1.	Removing the CPU	5-2
2.	Installing the CPU	5-2 (to 5-2)

History of the changes is shown as the "Revision History" at the end of this data.

変更履歴は，"Revision History"として，本データ末に記載してあります。

CHAPTER 1.
SPECIFICATIONS

	J				AM									
	PCG-FR77G/B	PCG-FR55G/B	PCG-FR55G	PCG-FR55R/P	PCG-FRV37	PCG-FRV35	PCG-FRV33	PCG-FRV31	PCG-FRV35 Canada only	PCG-FRV31 Canada Only	PCG-FRV35Q	PCG-FR872	PCG-FR870	PCG-FRV34
CPU	P4-2.4BGHz	Mobile Cel 2.0GHz	Mobile Cel 2.0GHz	Mobile Cel 2.0GHz	P4-2.8GHz	P4-2.66GHz	Mobile P4-2.2GHz-M	Cel-2.4GHz	P4-2.66GHz	Cel-2.4GHz	P4-2.66GHz	P4-2.66GHz	Cel-2.4GHz	P4-2.66GHz
LCD	15XGA (Clear Black)	15XGA (Clear Black)	15XGA (Clear Black)	15XGA	15XGA	15XGA	15XGA	15XGA	15XGA	15XGA	15XGA	15XGA	15XGA	15XGA
HDD	60GB	40GB	40GB	40GB	60GB	40GB	40GB	40GB	40GB	40GB	40GB	40GB	40GB	40GB
ChipSet	RADEON IGP 345M	RADEON IGP 345M	RADEON IGP 345M	RADEON IGP 345M	RADEON IGP 345M	RADEON IGP 345M	RADEON IGP 345M	RADEON IGP 345M	RADEON IGP 345M	RADEON IGP 345M	RADEON IGP 345M	RADEON IGP 345M	RADEON IGP 345M	RADEON IGP 345M
Graphic	Graphics core is built in RDADEON IGP 345M chip set	Graphics core is built in RDADEON IGP 345M chip set	Graphics core is built in RDADEON IGP 345M chip set	Graphics core is built in RDADEON IGP 345M chip set	Graphics core is built in RDADEON IGP 345M chip set	Graphics core is built in RDADEON IGP 345M chip set	Graphics core is built in RDADEON IGP 345M chip set	Graphics core is built in RDADEON IGP 345M chip set	Graphics core is built in RDADEON IGP 345M chip set	Graphics core is built in RDADEON IGP 345M chip set	Graphics core is built in RDADEON IGP 345M chip set	Graphics core is built in RDADEON IGP 345M chip set	Graphics core is built in RDADEON IGP 345M chip set	Graphics core is built in RDADEON IGP 345M chip set
DDR MEMORY	256MB X 1	256MB X 1	256MB X 1	256MB X 1	256MB X 2	256MB X 2	256MB X 1	256MB X 2	256MB X 2	256MB X 2	256MB X 2	256MB X 2	256MB X 2	256MB X 2
QUANTITY [STANDARD/MAX]	256/1024	256/1024	256/1024	256/1024	512/1024	512/1024	256/1024	512/1024	512/1024	512/1024	512/1024	512/1024	512/1024	512/1024
OPT-DRIVE	DVD+/-RW	CD-RW/ DVD-ROM	CD-RW/ DVD-ROM	CD-RW/ DVD-ROM	DVD-RW	DVD-RW	CD-RW/ DVD-ROM	CD-RW/ DVD-ROM	DVD-RW	CD-RW/ DVD-ROM	DVD-RW	DVD-RW	CD-RW/ DVD-ROM	CD-RW/ DVD-ROM
FDD	1/2"FDD	1/2"FDD	1/2"FDD	1/2"FDD	X	X	X	X	X	X	X	X	X	X
AC adaptor	PCGA-AC19V7	PCGA-AC19V7	PCGA-AC19V7	PCGA-AC19V7	PCGA-AC19V7	PCGA-AC19V7	PCGA-AC19V7	PCGA-AC19V7	PCGA-AC19V7	PCGA-AC19V7	PCGA-AC19V7	PCGA-AC19V7	PCGA-AC19V7	PCGA-AC19V7
Battery	PCGA-BP2NX	PCGA-BP2NX	PCGA-BP2NX	PCGA-BP2NX	PCGA-BP2NX	PCGA-BP2NX	PCGA-BP2NX	PCGA-BP2NX	PCGA-BP2NX	PCGA-BP2NX	PCGA-BP2NX	PCGA-BP2NX	PCGA-BP2NX	PCGA-BP2NX
OS	WinXP Home	WinXP Home	WinXP Home	WinXP Pro	WinXP Home	WinXP Home	WinXP Home	WinXP Home	WinXP Home	WinXP Home	WinXP Home	WinXP Home	WinXP Home	WinXP Home
			△2[MA]	△3[MA]				△2[MA]	△2[MA]	△2[MA]	△2[MA]	△2[MA]	△2[MA]	△3[MA]

	EU				AO							
	PCG-FR395EP	PCG-FR315S	PCG-FR315M	PCG-FR315B	PCG-FR825P	PCG-FR820	PCG-FR825SP	PCG-FR820S	PCG-FR820L	PCG-FR825L	PCG-FR825CP	PCG-FR820C
CPU	Cel-2.6GHz	P4-2.66GHz	P4-2.66GHz	Cel-2.6GHz	P4-2.66GHz	Mobile Cel 2.2GHz	P4-2.66GHz	Mobile Cel 2.2GHz	Mobile Cel 2.2GHz	Mobile Cel 2.2GHz	P4-2.66GHz	Mobile Cel 2.2GHz
LCD	15XGA	15XGA	15XGA	15XGA	15XGA	15XGA	15XGA	15XGA	15XGA	15XGA	15XGA	15XGA
HDD	40GB	60GB	40GB	40GB	60GB	40GB	60GB	40GB	40GB	60GB	60GB	40GB
ChipSet	RADEON IGP 345M	RADEON IGP 345M	RADEON IGP 345M	RADEON IGP 345M	RADEON IGP 345M	RADEON IGP 345M	RADEON IGP 345M	RADEON IGP 345M	RADEON IGP 345M	RADEON IGP 345M	RADEON IGP 345M	RADEON IGP 345M
Graphic	Graphics core is built in RDADEON IGP 345M chip set	Graphics core is built in RDADEON IGP 345M chip set	Graphics core is built in RDADEON IGP 345M chip set	Graphics core is built in RDADEON IGP 345M chip set	Graphics core is built in RDADEON IGP 345M chip set	Graphics core is built in RDADEON IGP 345M chip set	Graphics core is built in RDADEON IGP 345M chip set	Graphics core is built in RDADEON IGP 345M chip set	Graphics core is built in RDADEON IGP 345M chip set	Graphics core is built in RDADEON IGP 345M chip set	Graphics core is built in RDADEON IGP 345M chip set	Graphics core is built in RDADEON IGP 345M chip set
DDR MEMORY	256MB X 1	256MB X 2	256MB X 2	256MB X 1	256MB X 2	256MB X 1	256MB X 2	256MB X 1	256MB X 1	256MB X 1	256MB X 2	256MB X 1
QUANTITY [STANDARD/MAX]	256/1024	512/1024	512/1024	256/1024	512/1024	256/1024	512/1024	256/1024	256/1024	256/1024	512/1024	256/1024
OPT-DRIVE	CD-RW/ DVD-ROM	DVD+/-RW	CD-RW/ DVD-ROM	CD-RW/ DVD-ROM	DVD+/-RW	CD-RW/ DVD-ROM	DVD+/-RW	CD-RW/ DVD-ROM	CD-RW/ DVD-ROM	CD-RW/ DVD-ROM	DVD+/-RW	CD-RW/ DVD-ROM
FDD	1/2"FDD	1/2"FDD	1/2"FDD	1/2"FDD	1/2"FDD	1/2"FDD	1/2"FDD	1/2"FDD	1/2"FDD	1/2"FDD	1/2"FDD	1/2"FDD
AC adaptor	PCGA-AC19V7	PCGA-AC19V7	PCGA-AC19V7	PCGA-AC19V7	PCGA-AC19V7	PCGA-AC19V7	PCGA-AC19V7	PCGA-AC19V7	PCGA-AC19V7	PCGA-AC19V7	PCGA-AC19V7	PCGA-AC19V7
Battery	PCGA-BP2NX	PCGA-BP2NX	PCGA-BP2NX	PCGA-BP2NX	PCGA-BP2NX	PCGA-BP2NX	PCGA-BP2NX	PCGA-BP2NX	PCGA-BP2NX	PCGA-BP2NX	PCGA-BP2NX	PCGA-BP2NX
OS	WinXP Pro	WinXP Home	WinXP Home	WinXP Home	WinXP Pro	WinXP Home	WinXP Pro	WinXP Home	WinXP Home	WinXP Home	WinXP Pro	WinXP Home
					△2[MA]	△2[MA]	△2[MA]	△2[MA]	△2[MA]	△2[MA]	△3[MA]	△3[MA]

• The trademarks or registered trademarks of above table, refer to page 2.

• 本表中の商標・登録商標については，2 ページをご参照ください。

Confidential

CHAPTER 2.
BLOCK DIAGRAM

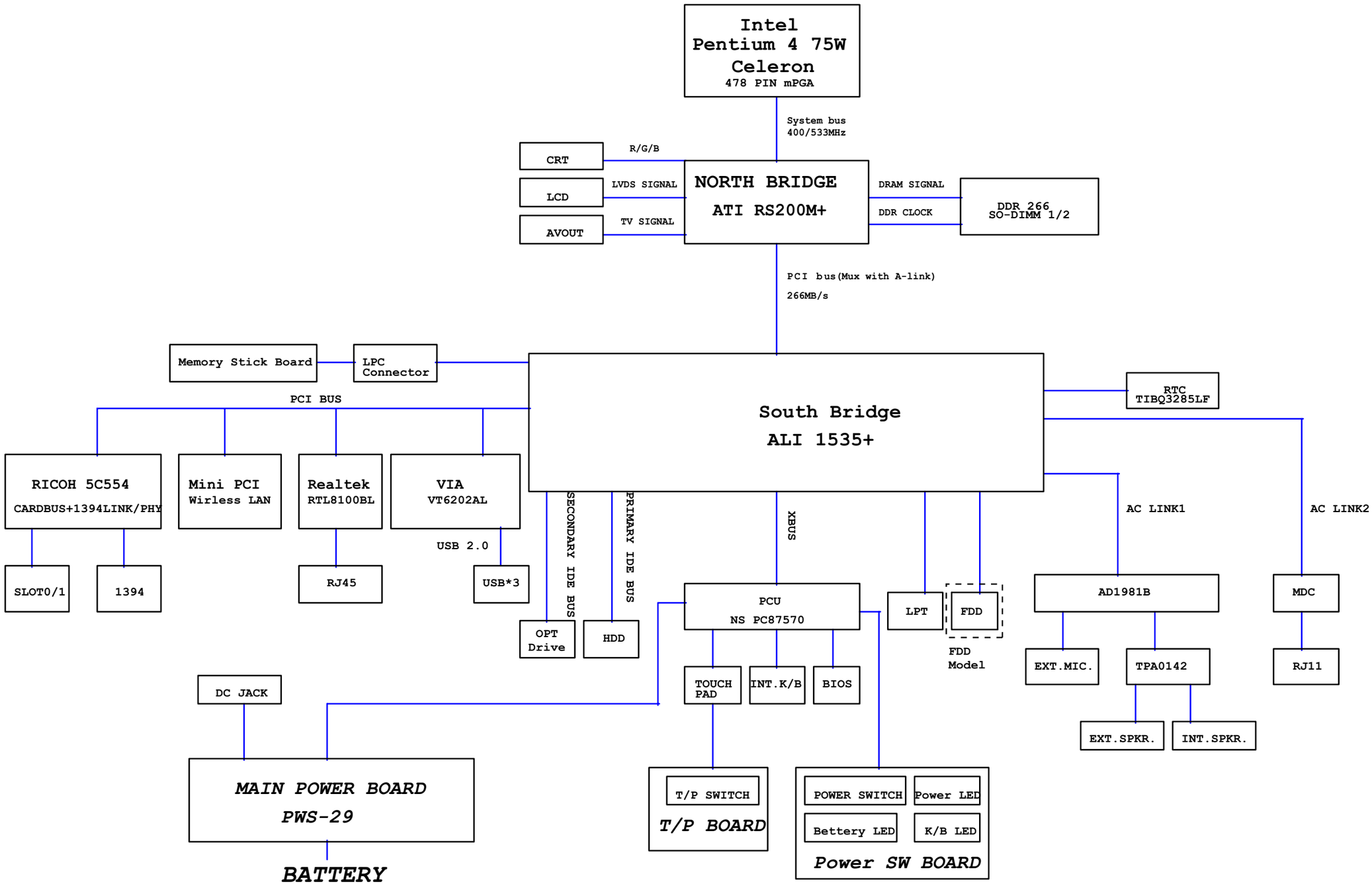

Confidential

PCG-FR55G/FR55R/FR77G (J)
PCG-FRV31/FRV33/FRV34/FRV35/FRV35Q/FRV37/FR870/FR872 (AM)
PCG-FR315B/FR315M/FR315S/FR395EP (EU)
PCG-FR820/FR820C/FR820L/FR820S/FR825CP/FR825L/FR825P/FR825SP (AO)

CHAPTER 3.
FRAME HARNESS DIAGRAM

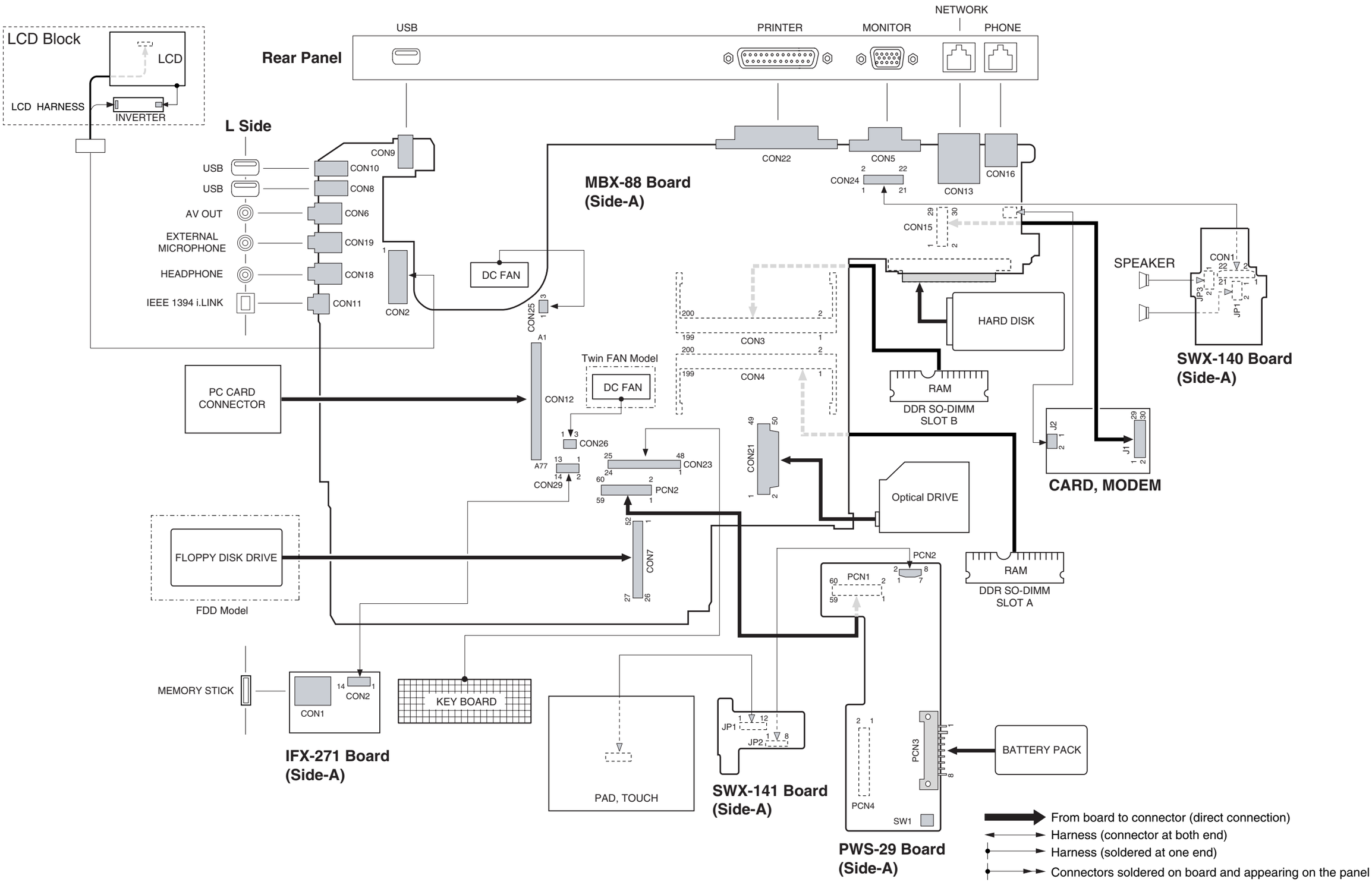

Confidential

PCG-FR55G/FR55R/FR77G (J)
PCG-FRV31/FRV33/FRV34/FRV35/FRV35Q/FRV37/FR870/FR872 (AM)
PCG-FR315B/FR315M/FR315S/FR395EP (EU)
PCG-FR820/FR820C/FR820L/FR820S/FR825CP/FR825L/FR825P/FR825SP (AO)

(END)

CHAPTER 4.

EXPLODED VIEWS AND PARTS LIST

- The parts list is compiled by blocks of a palmrest and bottom etc. The sections of the parts list are different depending on the model. Please refer to list of contents shown in the below.

- 分解図と部品表は，パームレスト，ボトムなどのブロックごとに分かれています。機種によって部品表のセクションが異なりますので，詳細は右下の一覧表を参照してください。

Section Page

Palmrest
P-1 4-2
Bottom
B-1 4-3
Main Board
M-1 4-4
LCD
L-1. 15-inch XGA (Clear Black) – Made by HI – 4-5
L-2. 15-inch XGA – Made by AU – 4-6
L-3. 15-inch XGA (High Brightness) – Made by SH – .. 4-7
Accessory
A-1 4-8
DIP Switch 4-9

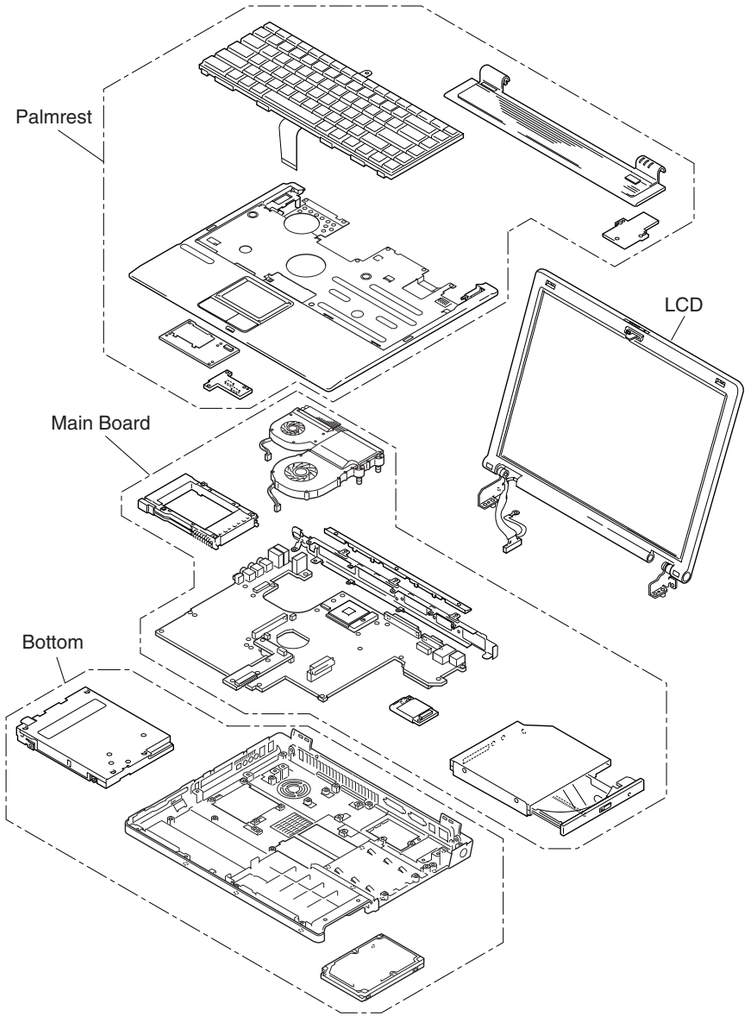

NOTE:

- Items marked " * " are not stocked since they are seldom required for routine service. Some delay should be anticipated when ordering these items.
- The mechanical parts with no reference number in the exploded views are not supplied.
- When two or more parts are shown, use the part described first as the main part.
- The parts marked " $ " are the High Value Modules (HVM).
- The parts marked " # " are the parts on which barcode label is attached.
  For the barcode label, refer to CHAPTER 5.
- The parts marked " & " are the "Customer Replacable Parts (CRP)" that can be replaced by Field Customer Support.
  Especially the parts with the <&> mark require the special attention to use them. Here fore, check first whether the desired part is one of the targetted parts of the Customer Replaceable Parts(CRP), or the non-targetted parts by referring to the exploded view.
- Regarding the boards of this model, the discrete parts on the boards cannot be replaced. However, Some connectors can be replaced.

The components identified by mark ⚠ or dotted line with mark ⚠ are critical for safety. Replace only with part number specified.
Les composants identifiés par une marque ⚠ sont critiques pour la sécurité. Ne les remplacer que par une pièce portant le numéro spécifié.

【使用上の注意】

- * 印の部品は常備在庫しておりません。
- 図面番号のない部品は供給しません。
- 併記部品の場合，上部記載部品をメイン部品として使用してください。
- 部品名称の前に$ 印のついた部品は，High Value Module (HVM) です。
- 商品名称の前に#印のついた部品は，バーコードラベル貼付部品です。
  バーコードラベルについてはCHAPTER 5を参照してください。
- 部品名称の前に＆印のついた部品は、お客様窓口などでも交換可能な Customer Replacable Parts (CRP)です。
  特に<&>印のついた部品は，使い分けが必要な部品ですので，分解図で Customer Replacable Parts 対象部品か，対象外部品かを必ず御確認ください。
- 本モデルの基板については，基板上の各部品の修理は行うことができません。ただし，一部のコネクタについては，修理可能です。

⚠印の部品，または⚠印付きの点線で囲まれた部品は，安全性を維持するために重要な部品です。従って交換時は，必ず指定の部品を使用してください。

		Palmrest	Bottom	Main Board	LCD	Accessory	
J	PCG-FR77G/B	P-1	B-1	M-1	L-1	A-1	
	PCG-FR55G/B	P-1	B-1	M-1	L-1	A-1	
	PCG-FR55G	P-1	B-1	M-1	L-1	A-1	⚠ [MA]
	PCG-FR55R/P	P-1	B-1	M-1	L-2	A-1	⚠ [MA]
AM	PCG-FRV37	P-1	B-1	M-1	L-2	A-1	
	PCG-FRV35(US)	P-1	B-1	M-1	L-2	A-1	
	PCG-FRV33	P-1	B-1	M-1	L-2	A-1	
	PCG-FRV31(US)	P-1	B-1	M-1	L-2	A-1	⚠ [MA]
	PCG-FRV35(CND)	P-1	B-1	M-1	L-2	A-1	⚠ [MA]
	PCG-FRV31(CND)	P-1	B-1	M-1	L-2	A-1	⚠ [MA]
	PCG-FRV35Q	P-1	B-1	M-1	L-2	A-1	⚠ [MA]
	PCG-FR872	P-1	B-1	M-1	L-2	A-1	⚠ [MA]
	PCG-FR870	P-1	B-1	M-1	L-2	A-1	⚠ [MA]
	PCG-FRV34	P-1	B-1	M-1	L-2	A-1	⚠ [MA]
EU	PCG-FR395EP	P-1	B-1	M-1	L-2	A-1	
	PCG-FR315S	P-1	B-1	M-1	L-3	A-1	
	PCG-FR315M	P-1	B-1	M-1	L-3	A-1	
	PCG-FR315B	P-1	B-1	M-1	L-2	A-1	
AO	PCG-FR825P	P-1	B-1	M-1	L-3	A-1	⚠ [MA]
	PCG-FR820	P-1	B-1	M-1	L-2	A-1	⚠ [MA]
	PCG-FR825SP	P-1	B-1	M-1	L-3	A-1	⚠ [MA]
	PCG-FR820S	P-1	B-1	M-1	L-2	A-1	⚠ [MA]
	PCG-FR820L	P-1	B-1	M-1	L-2	A-1	⚠ [MA]
	PCG-FR825L	P-1	B-1	M-1	L-2	A-1	⚠ [MA]
	PCG-FR825CP	P-1	B-1	M-1	L-3	A-1	⚠ [MA]
	PCG-FR820C	P-1	B-1	M-1	L-2	A-1	⚠ [MA]

- Abbreviation
  CND : Canadian model.

Confidential

PCG-FR55G/FR55R/FR77G (J)
PCG-FRV31/FRV33/FRV34/FRV35/FRV35Q/FRV37/FR870/FR872 (AM)
PCG-FR315B/FR315M/FR315S/FR395EP (EU)
PCG-FR820/FR820C/FR820L/FR820S/FR825CP/FR825L/FR825P/FR825SP (AO)

P-1. Palmrest

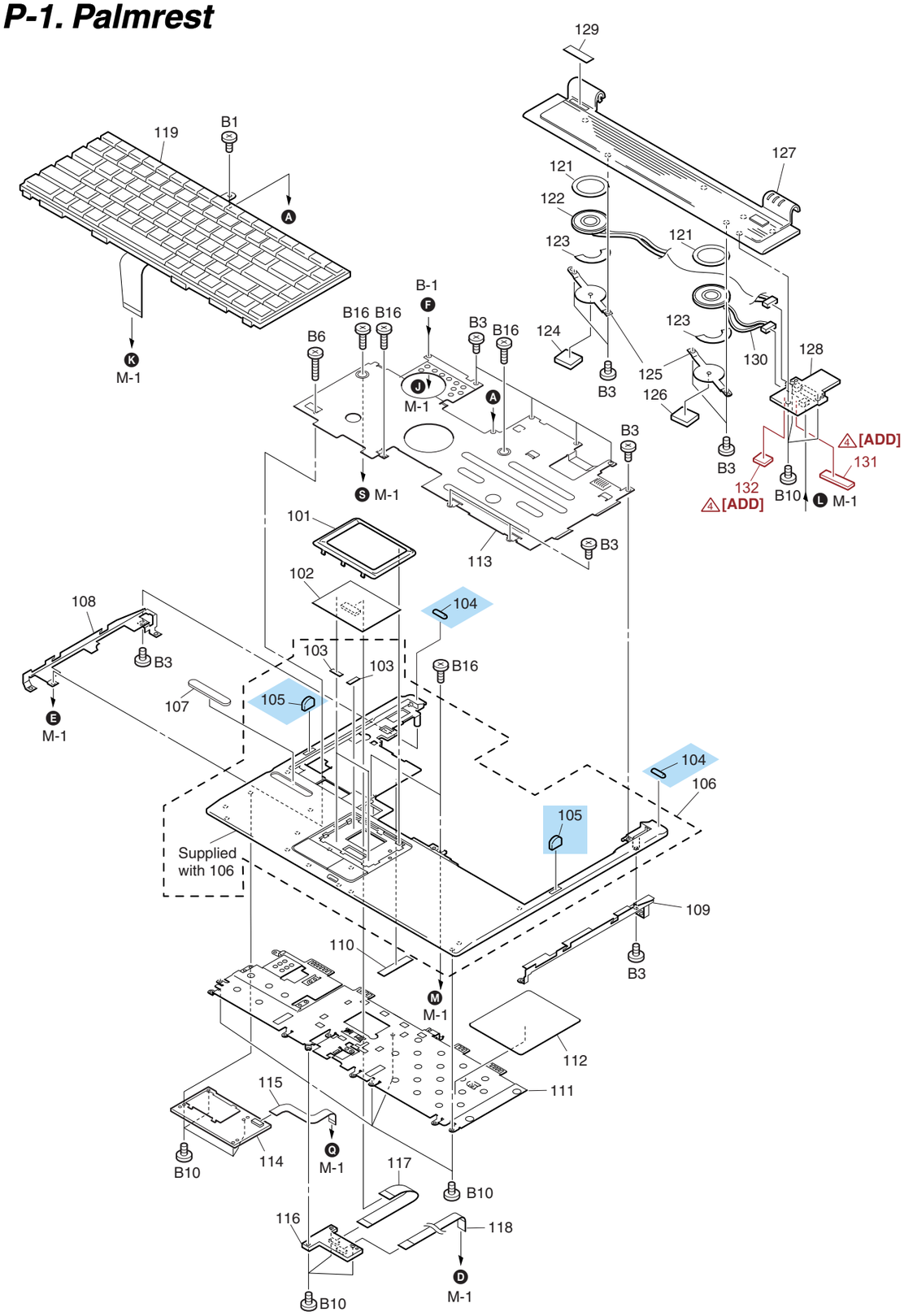

Ref.No.	Part No.		Description
101	4-670-198-01		ESCUSHION TOUCHPAD
102	1-796-319-31		PAD, TOUCH
103	4-672-077-01		ADHESIVE TAPE TP
104	4-677-536-01	&	SHEET RUBBER DISPLAY
105	4-671-634-01	&	CUSHION PALMREST
107	4-674-042-01		MEMORY STICK WINDOW
* 108	4-674-023-01		BRACKET PALMREST L
* 109	4-674-022-01		BRACKET PALMREST R
110	4-673-304-01		SPACER PC CARD
* 111	4-674-024-01		BRACKET TOUCHPAD
112	4-672-858-01		SHEET BRACKET TOUCHPAD
* 113	4-674-025-01		BRACKET KEYBOARD
114	A-8068-051-A	$	COMPLETE PWB IFX-271
115	1-860-222-11		JE1.1 FPC (MS)
116	A-8068-379-A	$	COMPLETE PWB SWX-141
117	1-827-189-11		NE5.1 FFC(TP)
118	1-827-192-11		NE5.1 FFC(PWS-TP)
121	4-644-357-01		CUSHION SPK
122	1-825-426-11		NE5.1 SPEAKER
123	4-654-631-01		GUARD SPK
124	4-672-855-01		GASKET SPEAKER
125	4-671-631-01		BRACKET SPEAKER
126	4-673-615-01		GASKET SPEAKER R
127	X-4626-183-1		HOOD KEYBOARD ASSY (S)
128	A-8068-049-A	$	COMPLETE PWB SWX-140
130	1-825-427-11		NE5.1 SPEAKER(R)
131	2-189-956-01		GASKET SWX1 — [ADD]
132	2-189-957-01		GASKET SWX2 — [ADD]

Ref.No.	Part No.		Description
B1	4-216-272-01		SCREW (M2), +
B3	4-641-726-12	<&>	SCREW (M2), SPECIAL HEAD
B5	4-644-637-01	<&>	GRIP, M2 EG
B6	4-644-637-42		GRIP, M2 EG
B10	4-665-205-01	<&>	SPECIAL FLAT HEAD (EG GRIP),M2
B16	4-645-214-61		GRIP, M2

	Ref.No.	Part No.		Description	J				AM									EU				AO								
					FR77G/B	FR55G/B	FR55G	FR55R/P	FRV37	FRV35(US)	FRV33	FRV31(US)	FRV35(CND)	FRV31(CND)	FRV35Q	FR872	FR870	FRV34		FR395EP	FR315S	FR315M	FR315B	FR825P	FR820	FR825SP	FR820S	FR820L	FR825L	FR825CP	FR820C
	106	X-4626-182-1		HOUSING PALMREST ASSY (S)	●	●	●	●	●	●	●	●	●	●	●	●	●	●		●	●	●	●	●	●	●	●	●	●	●	●
[MA]		X-4626-458-1	$	HOUSING PALMREST ASSY (C)																										●	●
	119	1-478-086-11	$ #	KEY BOARD UNIT (JP)	●	●	●	●																							
		1-478-086-21	#	KEY BOARD UNIT (US)					●	●	●	●	●	●				●						●	●					●	●
		1-478-086-31	$ #	(UK)...KEY BOARD UNIT (GB)																●	●	●	●								
		1-478-086-41	$ #	(German/Austrian)...KEY BOARD UNIT (DE)																●	●	●	●								
		1-478-086-51	$ #	(Swiss)...KEY BOARD UNIT (CH)																●	●	●	●								
		1-478-086-61	$ #	(French)...KEY BOARD UNIT (FR)																●	●	●	●								
		1-478-086-71	$ #	(Italian)...KEY BOARD UNIT (IT)																●	●	●	●								
		1-478-086-91	$ #	(Spanish)...KEY BOARD UNIT (ES)																●	●	●	●								
[MA]		1-478-086-81	$ #	KEY BOARD UNIT (LA)												●	●														
[MA]		1-478-147-11	$ #	KEY BOARD UNIT (CA)											●																
[MA]		1-478-147-21	#	KEY BOARD UNIT (KR)																								●	●		
[MA]		1-478-147-31	#	KEY BOARD UNIT (TH)																						●	●				
	129	4-679-261-01		LABEL ID (J)	●																										
		4-679-261-11		LABEL ID (J)		●																									
		4-678-502-01		ID LABEL U					●																						
		4-678-502-11		ID LABEL U						●																					
		4-678-502-31		ID LABEL U							●																				
		4-679-661-01		LABEL ID (E)																●											
		4-679-661-11		LABEL ID (E)																	●										
		4-679-661-21		LABEL ID (E)																		●									
		4-679-661-31		LABEL ID (E)																			●								
[MA]		4-679-261-21		LABEL ID (J)			●																								
[MA]		4-678-502-21		ID LABEL U								●																			
[MA]		4-679-657-01	$	LABEL ID(U)									●																		
[MA]		4-679-657-11	$	LABEL ID(U)										●																	
[MA]		4-679-657-21	$	LABEL ID(U)												●															
[MA]		4-679-657-31	$	LABEL ID(U)													●														
[MA]		4-679-657-41	$	LABEL ID(U)											●																
[MA]		4-679-264-01		LABEL ID (I)																				●							
[MA]		4-679-264-11		LABEL ID (I)																					●						
[MA]		4-679-264-21		LABEL ID (I)																						●					
[MA]		4-679-264-31		LABEL ID (I)																							●				
[MA]		4-679-264-41		LABEL ID (I)																								●			
[MA]		4-679-264-51		LABEL ID (I)																									●		
[MA]		4-679-262-01		LABEL ID (J)				●																							
[MA]		4-678-502-41		ID LABEL U														●													
[MA]		4-680-540-01	$	LABEL ID(C)																										●	
[MA]		4-680-540-11	$	LABEL ID(C)																											●
							[MA]	[MA]				[MA]	[MA]	[MA]	[MA]	[MA]	[MA]	[MA]						[MA]	[MA]	[MA]	[MA]	[MA]	[MA]	[MA]	[MA]

- This parts list contains two different types of parts.
  The first type is the parts that are common to all models.
  The other type is the parts that are different depending on each model.

・この部品表は，機種共通の部品と，機種によって使い分けが必要な部品に分かれています。

Confidential

B-1. Bottom

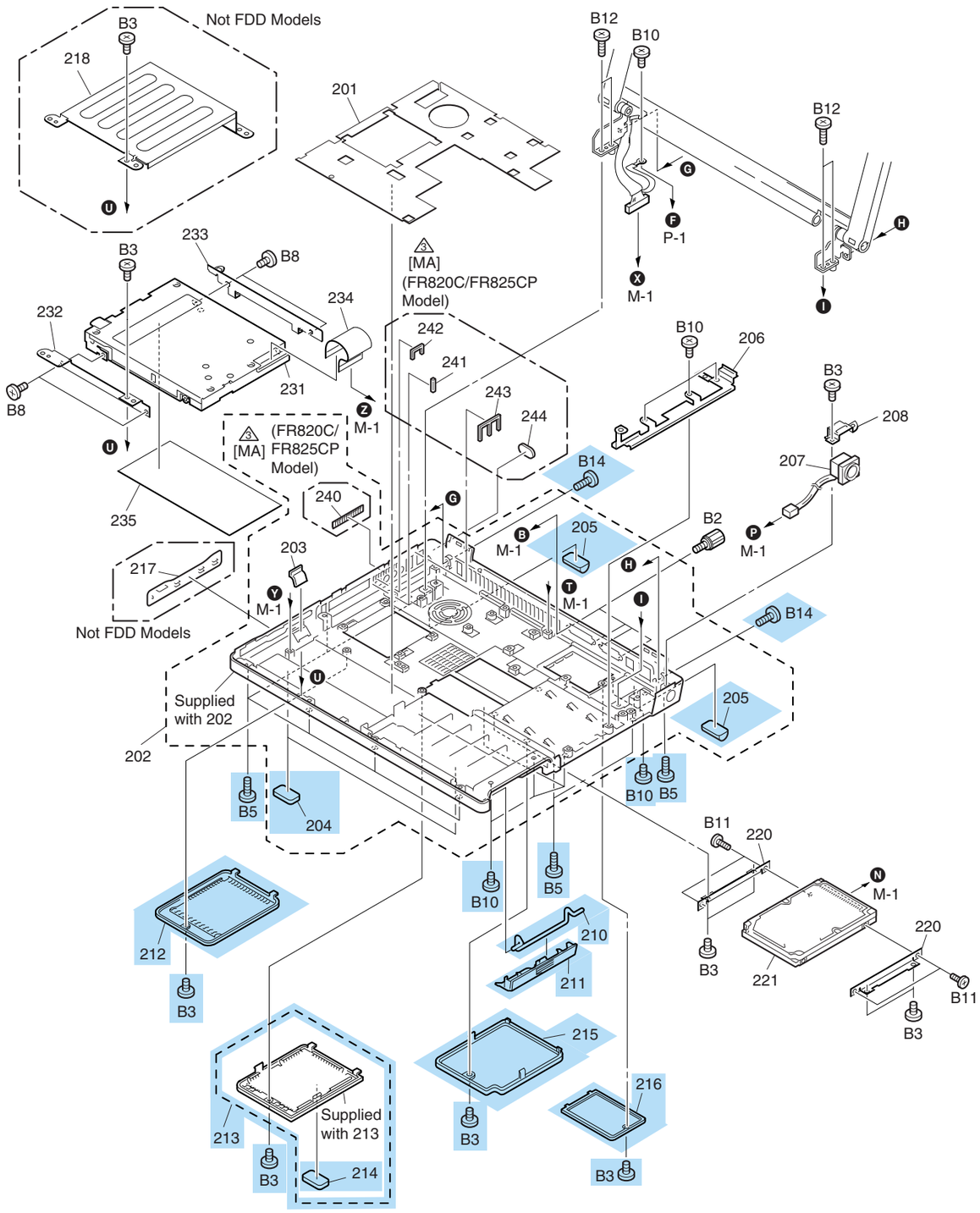

Ref.No.	Part No.		Description
201	4-677-632-01		INSULATOR BOTTOM
203	4-670-193-01		LENS FDD
204	4-677-197-01	&	FOOT FRONT
205	4-674-041-01	&	FOOT REAR
* 206	4-676-348-01		BRACKET DC
207	1-827-606-11		JE1.1 DC CABLE (INT)
* 208	4-674-019-01		PLATE DC
210	4-671-645-01	&	DOOR BATTERY SPRING
211	4-673-853-01	&	DOOR BATTERY
212	X-4626-186-1	&	COVER MINIPCI ASSY (S)
215	4-673-851-01	&	COVER HDD
216	4-673-852-01	&	COVER MODEM
* 220	4-674-033-01		BRACKET HDD
B2	4-635-966-01		SCREW (HEX)
B3	4-641-726-12	<&>	SCREW (M2), SPECIAL HEAD
B5	4-644-637-01	<&>	GRIP, M2 EG
B10	4-665-205-01	<&>	SPECIAL FLAT HEAD (EG GRIP),M2
B11	4-673-018-02		SCREW SPECIAL HEAD
B12	4-673-019-01		SCREW +B
B14	4-673-655-01	&	SCREW +B

					J				AM									EU				AO								
	Ref.No.	Part No.		Description	FR77G/B	FR55G/B	FR55G	FR55R/P	FRV37	FRV35(US)	FRV33	FRV31(US)	FRV35(CND)	FRV31(CND)	FRV35Q	FR872	FR870	FRV34		FR395EP	FR315S	FR315M	FR315B	FR825P	FR820	FR825SP	FR820S	FR820L	FR825L	FR825CP	FR820C
	202	X-4626-496-1		HOUSING BOTTOM ASSY JE12	●	●	●	●	●	●	●	●	●	●	●	●	●		●	●	●	●	●	●	●	●	●	●		
[MA]		X-4626-413-1	$	HOUSING BOTTOM ASSY(C)																									●	●
	213	X-4626-185-1	&	COVER MEMORY ASSY (S)	●	●	●	●	●	●	●	●	●	●	●	●	●		●	●	●	●	●	●	●	●	●	●		
[MA]		X-4626-414-1	$ &	MEMORY COVER ASSY (C)																									●	●
	214	4-671-635-01	&	FOOT	●	●	●	●	●	●	●	●	●	●	●	●	●		●	●	●	●	●	●	●	●	●	●		
[MA]		4-677-197-01	&	FOOT FRONT																									●	●
	217	4-675-126-01		CAP FDD					●	●	●	●	●	●	●	●	●													
	* 218	4-676-347-01		BRACKET DUMMY FDD					●	●	●	●	●	●	●	●	●													
	221	A-8116-402-A	$ #	ASSY HDD 60GB(I,40)(S)	●				●											●				●		●		●	●	
		A-8116-404-A	$ #	ASSY HDD 40GB(I,40)(S)		●	●	●		●	●	●	●	●	●	●	●		●		●	●		●		●	●			●
	231	1-796-692-11	$ #	NE5.1 FDD (NEC)	●	●	●	●											●	●	●	●	●	●	●	●	●	●	●	●
	* 232	4-674-031-01		BRACKET FDD R	●	●	●	●											●	●	●	●	●	●	●	●	●	●	●	●
	* 233	4-674-032-01		BRACKET FDD L	●	●	●	●											●	●	●	●	●	●	●	●	●	●	●	●
	234	1-827-190-11		NE5.1 FFC(FDD)	●	●	●	●											●	●	●	●	●	●	●	●	●	●	●	●
	235	4-671-627-01		INSULATOR FDD	●	●	●	●											●	●	●	●	●	●	●	●	●	●	●	●
[MA]	240	4-679-450-01	$	COVER BTM LEFT																									●	●
[MA]	241	4-679-452-01	$	CUSHION PC CARD																									●	●
[MA]	242	4-679-453-01	$	CUSHION ILINK																									●	●
[MA]	243	4-679-454-01	$	CUSHION USB																									●	●
[MA]	244	4-679-455-01	$	RUBBER CAP																									●	●
	B8	4-646-807-11		0 PLATE M2.5 (FDD)	●	●	●	●											●	●	●	●	●	●	●	●	●	●	●	●
							[MA]	[MA]			[MA]	[MA]	[MA]	[MA]	[MA]	[MA]	[MA]							[MA]	[MA]	[MA]	[MA]	[MA]	[MA]	[MA]	[MA]

- This parts list contains two different types of parts.
  The first type is the parts that are common to all models.
  The other type is the parts that are different depending on each model.

・この部品表は，機種共通の部品と，機種によって使い分けが必要な部品に分かれています。

Confidential

M-1. Main Board

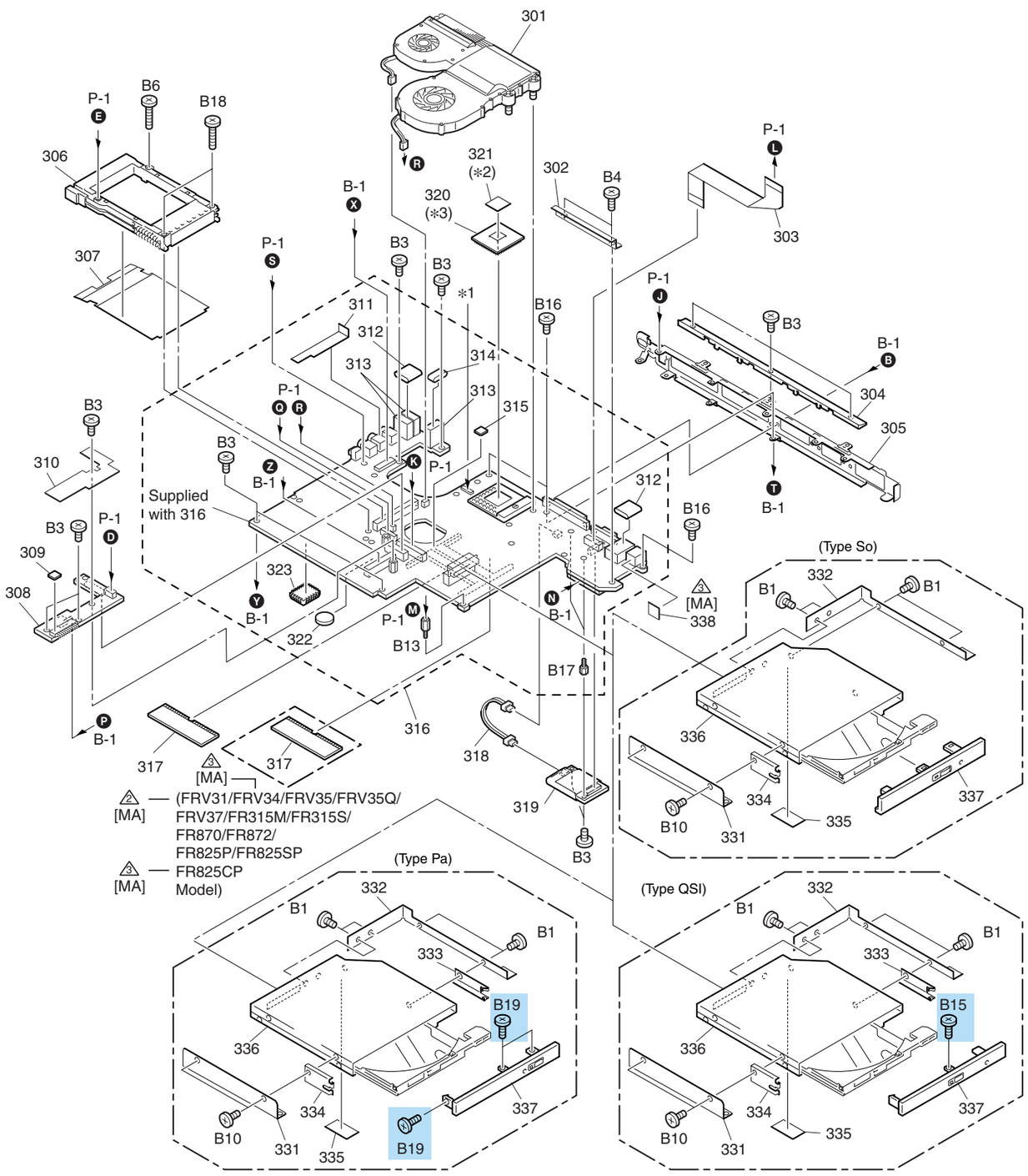

Ref.No.	Part No.		Description
* 302	4-674-030-01		GUIDE DRIVE
303	1-827-605-11		JE1.1 FFC(PWR)
304	4-670-194-01		COVER HOOD
306	1-761-695-11		NE5.1 PC CARD(EJECTER)
307	4-677-636-01		INSULATOR PC CARD
308	A-8068-484-A	$	COMPLETE PWB PWS-29
309	4-673-303-01		SPACER TOUCHPAD BUTTON
310	4-677-635-01		INSULATOR PWS
311	4-677-637-01		CUPPER TAPE
312	4-672-849-01		GASKET LAN
313	9-885-029-05		CONNECTOR, USB(A)
314	4-677-639-01		GASKET USB
315	4-677-638-01		CUSHION FAN
316	A-8068-351-A	$ #	COMPLETE PWB MBX-88 JE12
318	1-962-643-11		HARNESS(FRV MODEM CABLE)(S)
319	1-761-606-14	#	CARD, MODEM
321	4-668-785-01		THERMAL SHEET CPU
322	1-756-148-11		SECONDARY, BATTERY, LITHIUM
323	A-8068-590-A		BIOS ROM WITH IMAGE JE12 (S)
* 331	4-674-029-01		BRACKET (DRIVE) (L)
* 332	4-674-028-01		BRACKET DRIVE R
334	4-670-244-01		SPRING DRIVE R
335	4-677-647-01		INSULATOR DRIVE
B1	4-216-272-01		SCREW (M2), +
B3	4-641-726-12	<&>	SCREW (M2), SPECIAL HEAD
B4	4-641-726-41	<&>	SCREW (M2), SPECIAL HEAD
B6	4-644-637-42		GRIP, M2 EG
B10	4-665-205-01	<&>	SPECIAL FLAT HEAD (EG GRIP),M2
B13	4-673-121-01		SCREW PWS
B15	4-650-481-01	&	SCREW (B1.7),TAPPING
B16	4-645-214-61		GRIP, M2
B17	4-651-989-01		SPACER (MBX)
B18	7-621-772-50		SCREW +B 2X10
B19	4-645-177-01	&	SCREW (M1.7X3.5)

					J				AM									EU				AO								
	Ref.No.	Part No.		Description	FR77G/B	FR55G/B	FR55G	FR55R/P	FRV37	FRV35(US)	FRV33	FRV31(US)	FRV35(CND)	FRV31(CND)	FRV35Q	FR872	FR870	FRV34		FR395EP	FR315S	FR315M	FR315B	FR825P	FR820	FR825SP	FR820S	FR820L	FR825L	FR825CP	FR820C
	301	A-8115-823-A	$	ASSY COOLING UNIT (M) (S)		●	●	●			●	●		●			●								●		●	●	●		●
		A-8115-824-A	$	ASSY COOLING UNIT (DTP) (S)	●				●	●			●		●	●		●		●	●	●	●	●		●				●	
	* 305	4-674-018-01		BRACKET IO	●	●	●	●	●	●	●	●	●	●	●	●	●	●		●	●	●	●	●	●	●	●	●	●		
[MA]	*	X-4626-412-1	$	BRACKET IO CHN																										●	●
	317	6-600-158-01		IC HYS64D32020GDL-7-B (DDR DIMM 256MB)	●	●	●	●	●	●	●	●	●	●	●	●	●	●		●	●	●	●	●	●	●	●	●	●	●	●
		6-705-094-01		IC M470L3224FT0-CB3 (DDR DIMM 256MB)	●	●	●	●	●	●	●	●	●	●	●	●	●	●		●	●	●	●	●	●	●	●				
	320	6-704-668-01		IC RK80532PE056512SL6PC (P4 2.40B GHz)	●																										
		6-704-322-01		IC RH80532NC041256SL6QH (M-C 2.00 GHz)		●																									
		6-704-665-01		IC RK80532PE072512SL6PF (P4 2.80 Ghz)					●																						
		6-704-132-01		IC RK80532PE067512SL6S3 (P4 2.66 GHz)						●											●										
		6-704-614-01		IC RH80532GC049512SL6VB (P4-M 2.20 GHz)							●																				
		6-705-109-01		IC RK80532RC064128SL6VV (C 2.60 GHz)																●			●								
		6-704-666-01		IC RK80532PE067512SL6PE (P4 2.66 GHz)									●		●	●		●				●		●		●				●	
[MA]		6-704-652-01		IC RH80532NC041256SL6VJ (M-C 2.00 GHz)			●	●																							
[MA]		6-705-133-01		IC RK80532RC056128SL6VU (C 2.40GHz)								●		●			●														
[MA]		6-704-957-01		IC RH80532NC049256SL73Y (M-C 2.20GHz)																					●		●	●	●		●
	333	4-677-259-01		SPRING DRIVE L		●	●	●	●	●	●	●	●	●	●	●	●	●		●		●	●		●		●	●	●		●
	336	8-457-509-03	$ #	DVD DRIVE, DW-U50A-VN/T (So)	●																●			●		●				●	
		1-796-821-11	$ #	COMBO DRIVE (SBW-242U) (QSI)		●	●	●			●	●		●			●	●		●		●	●		●		●	●	●		●
		1-796-480-11	$ #	W-DVD(UJ-810B) (Pa)					●	●			●		●	●															
	337	X-4626-379-1		DVD+/-RW(SO)	●																●			●		●				●	
		X-4626-113-1		ASSY QSI COMBO BEZEL (QSI)		●	●	●			●	●		●			●	●		●		●	●		●		●	●	●		●
		X-4626-070-1		ASSY KME DVD-RW BEZEL (Pa)					●	●			●		●	●															
[MA]	338	4-679-451-01	$	SHEET MODEM																										●	●
							[MA]	[MA]				[MA]	[MA]	[MA]	[MA]	[MA]	[MA]	[MA]						[MA]	[MA]	[MA]	[MA]	[MA]	[MA]	[MA]	[MA]

*1 The DIP switch setting, refer to page 4-9 “DIP switch”.

*2 The THERMAL SHEET CPU (Ref. 66) cannot be re-used if it is removed once.
When the COOLING UNIT (Ref. 84) is removed, be sure to replace it with the new one.

*3 When change the CPU (Ref. 15), refer to “ 5-2 Replacing the CPU ” in CHAPTER 5.

- This parts list contains two different types of parts.
  The first type is the parts that are common to all models.
  The other type is the parts that are different depending on each model.

*1 DIP スイッチの設定は， 4 - 9 頁「DIP Switch」を参照してください。

*2 THERMAL SHEET CPU (Ref.66) は、一度取り外したものを再利用する事はできません。
COOLING UNIT (Ref.84) を外した場合には、必ず新しいものと交換してください。

*3 CPU (Ref.15)を交換する際は、CHAPTER 5、「5-2. ＣＰＵの交換」を参照してください。

・この部品表は，機種共通の部品と，機種によって使い分けが必要な部品に分かれています。

Confidential

L-1. LCD 15-inch XGA (Clear Black)
– Made by HI –

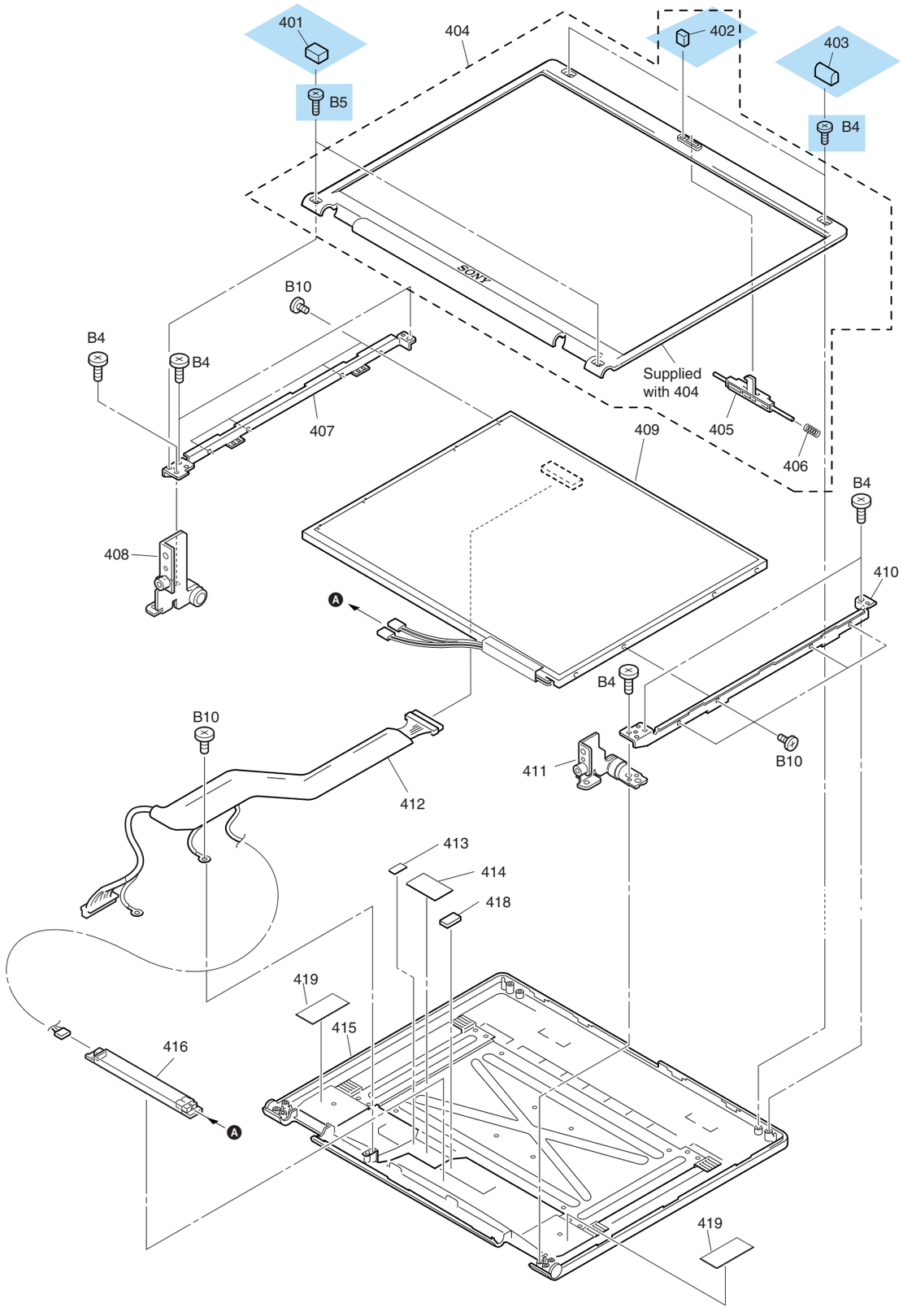

Ref.No.	Part No.		Description
401	4-671-639-01		CUSHION HINGE
402	4-671-637-01		CUSHION LATCH
403	4-671-638-01		CUSHION LCD
* 404	X-4625-939-1		ASSY BEZEL DISPLAY 15
405	4-673-874-01		LCD HOOK KNOB 15
406	4-671-640-01		SPRING LATCH LCD
* 407	4-673-876-01		LCD 15 BRACKET L
408	4-671-457-11		HINGE L
409	A-8115-792-A	$ #	ASSY LCD 15XGA (HI) (S)
* 410	4-673-877-01		LCD 15 BRACKET R
411	4-671-456-11		HINGE R
412	1-962-513-11		LCD HARNESS (H)
413	4-673-878-01		CUSHION INV
414	4-673-879-01		SERMAL SHEET INV
415	X-4625-938-1		ASSY HOUSING DISPLAY 15
416	1-478-040-11		INVERTER UNIT
418	4-676-923-01		CUSHION INV R
419	4-677-111-01		THERMAL SEET LCD
B4	4-641-726-41		<&> SCREW (M2), SPECIAL HEAD
B5	4-644-637-01		<&> GRIP, M2 EG
B10	4-665-205-01		<&> SPECIAL FLAT HEAD (EG GRIP),M2

Confidential

L-2. LCD 15-inch XGA –Made by AU –

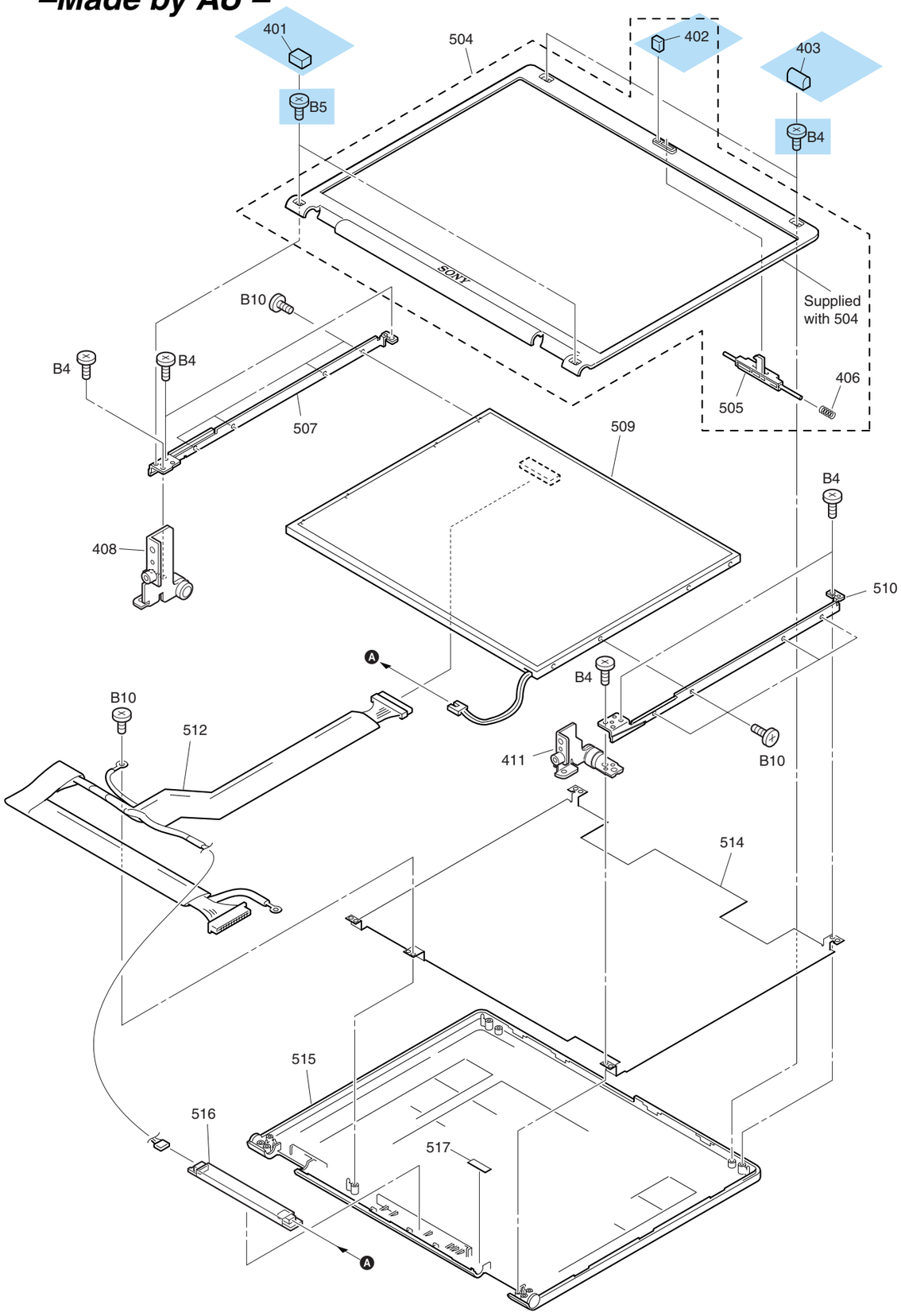

Ref.No.	Part No.		Description
401	4-671-639-01		CUSHION HINGE
402	4-671-637-01		CUSHION LATCH
403	4-671-638-01		CUSHION LCD
406	4-671-640-01		SPRING LATCH LCD
408	4-671-457-01		HINGE L
411	4-671-456-01		HINGE R
504	X-4625-822-1		BEZEL DISPLAY ASSY (15) (S)
505	4-670-228-01		BUTTON LATCH LCD
* 507	4-678-902-01		LCD BRKT L AU 15XGA
509	A-8115-791-A	$ #	ASSY LCD 15XGA (AU) (S)
* 510	4-678-903-01		LCD BRKT R AU 15XGA
512	1-962-630-11		HARNESS, LCD (15XGA)
514	4-671-636-01		LCD SHIELDING
515	X-4625-820-1		HOUSING DISPLAY ASSY (S)
516	1-476-317-21		INVERTER UNIT
517	4-673-299-01		INVERTER TAPE
B4	4-641-726-41		<&> SCREW (M2), SPECIAL HEAD
B5	4-644-637-01		<&> GRIP, M2 EG
B10	4-665-205-01		<&> SPECIAL FLAT HEAD (EG GRIP),M2

Confidential

L-3. LCD 15-inch XGA (High Brightness) –Made by SH –

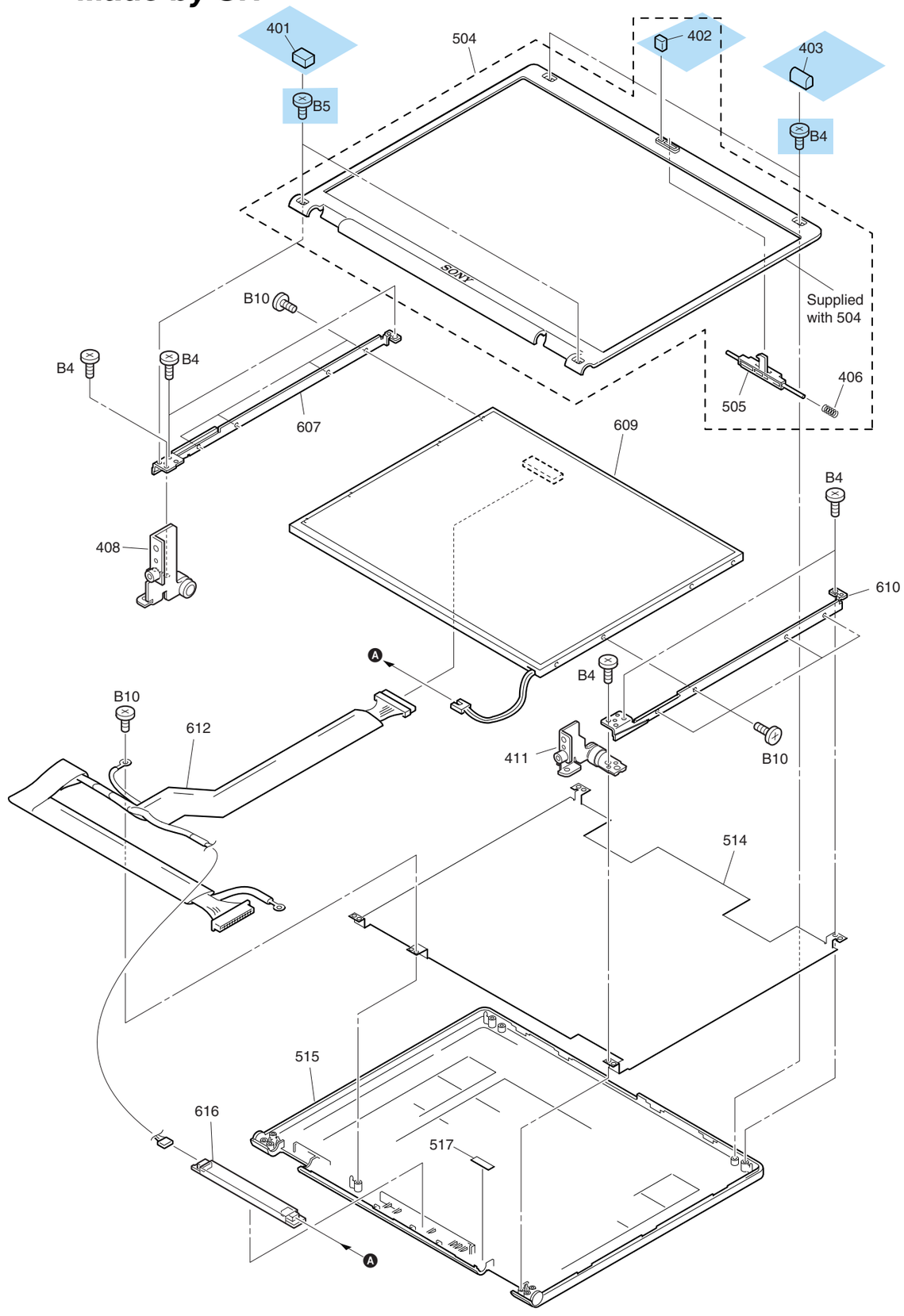

Ref.No.	Part No.		Description
401	4-671-639-01		CUSHION HINGE
402	4-671-637-01		CUSHION LATCH
403	4-671-638-01		CUSHION LCD
406	4-671-640-01		SPRING LATCH LCD
408	4-671-457-01		HINGE L
411	4-671-456-01		HINGE R
504	X-4625-822-1		BEZEL DISPLAY ASSY (15)(S)
505	4-670-228-01		BUTTON LATCH LCD
514	4-671-636-01		LCD SHIELDING
515	X-4625-820-1		HOUSING DISPLAY ASSY (S)
517	4-673-299-01		INVERTER TAPE
* 607	4-671-454-01		BRACKET LCD L (15)
609	A-8115-790-A	$ #	ASSY LCD 15XGA (SH) (S)
* 610	4-671-453-01		BRACKET LCD R (15)
612	1-962-515-11		LCD HARNESS(SH-H)
616	1-476-316-31		INVERTER UNIT
B4	4-641-726-41		<&> SCREW (M2), SPECIAL HEAD
B5	4-644-637-01		<&> GRIP, M2 EG
B10	4-665-205-01		<&> SPECIAL FLAT HEAD (EG GRIP),M2

Confidential

A-1. Accessory

901
AC Adaptor

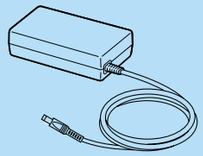

902
Battery Pack

903
Power Cord

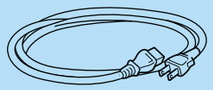

904
Power Cord

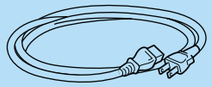

905
Power Cord

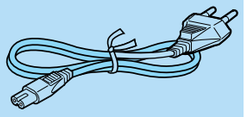

906
Coversion Plug
3P Adaptor

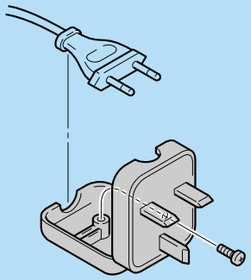

[MA]
907
Power Cord

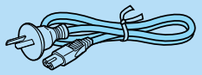

[MA]
908
Power Cord

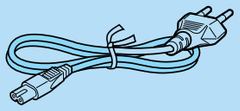

[MA]
909
Power Cord

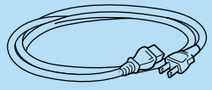

Ref.No.	Part No.			Description
⚠901	1-478-037-32	$	&	ADAPTOR, AC

	Ref.No.	Part No.			Description	J				AM									EU				AO								
						FR77G/B	FR55G/B	FR55G	FR55R/P	FRV37	FRV35(US)	FRV33	FRV31(US)	FRV35(CND)	FRV31(CND)	FRV35Q	FR872	FR870	FRV34	FR395EP	FR315S	FR315M	FR315B	FR825P	FR820	FR825SP	FR820S	FR820L	FR825L	FR825CP	FR820C
	902	A-8067-763-A	$ #	&	BP2NX SNT(J)ASSY(S)	●	●	●	●																					
		A-8112-427-A	$ #	&	BP2NX SNT(U)ASSY (S)					●	●	●	●	●	●	●	●	●												
		1-756-269-42	$ #	&	BATTERY PACK, LITHIUM ION														●	●	●	●	●	●	●	●	●	●	●	●
	⚠ 903	1-790-732-32		&	CORD, POWER	●	●	●	●																					
	⚠ 904	1-757-562-21		&	CORD, POWER					●	●	●	●	●	●	●	●	●												
	⚠ 905	1-575-131-61		&	CORD, POWER														●	●	●	●	●	●	●	●				
	906	1-770-019-12		&	(UK)...ADAPTOR, CONVERSION PLUG 3P (GB)														●	●	●	●	●	●						
[MA]	⚠ 907	1-555-074-31		&	CORD, POWER																		●	●						
[MA]	⚠ 908	1-823-947-32		&	POWER-SUPPLY CORD																						●	●		
[MA]	⚠ 909	1-782-476-22		&	CORD, POWER																								●	●
	-	1-816-429-12		&	(UK)...PHONE PLUG (GB)														●	●	●	●								
	~~-~~	~~4-678-516-01~~		~~&~~	~~QUICK START U(CN)~~	●	●																							
	-	4-679-031-01	$	&	QUICK START U(SD)					●	●	●	●	●	●			●												
[MA]	-	4-679-032-01	$	&	QUICK START Q											●														
[MA]	-	4-679-033-01	$	&	QUICK START L												●	●												
	-	4-679-016-01	$	&	GETTING STARTED BOOKLET														●	●	●	●								
	-	4-679-332-01		&	Instruction Manual (XP Home Edition)	●	●	●																						
[MA]	-	4-679-777-11		&	Instruction Manual (XP Home Edition/XP Professional)																		●	●	●	●				
[MA]	-	4-679-777-21		&	Instruction Manual (XP Home Edition)																						●	●		
[MA]	-	4-679-778-31	$	&	Instruction Manual (XP Home Edition/XP Professional)																								●	●
[MA]	-	4-679-333-01		&	Instruction Manual (XP Professional)				●																					
[MA]	-	4-679-029-01	$	&	SPECIFICATION SHEET											●														
[MA]	-	4-679-030-01	$	&	SPECIFICATION SHEET												●	●												
								[MA]	[MA]				[MA]	[MA]	[MA]	[MA]	[MA]	[MA]					[MA]	[MA]	[MA]	[MA]	[MA]	[MA]	[MA]	[MA]
										[DEL]										[COR]										

[DEL]

- This parts list contains two different types of parts.
  The first type is the parts that are common to all models.
  The other type is the parts that are different depending on each model.

・この部品表は，機種共通の部品と，機種によって使い分けが必要な部品に分かれています。

Confidential

DIP Switch

The DIP switch setting is following table.
DIP スイッチの設定は下の表をご参照ください

J	[MA] PCG-FR77G/B, FR55G/B, FR55G 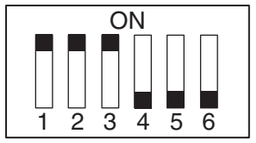 [MA] PCG-FR55R/P 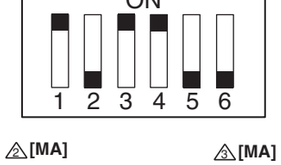 	PCG-FR77G/B 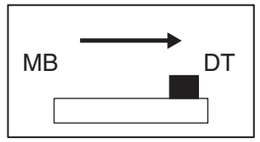 [MA] [MA] PCG-FR55G/B, FR55G, FR55R/P 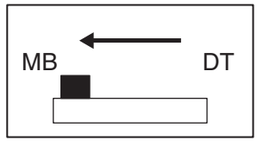
AM	[MA] PCG-FRV37, FRV35, FRV33, FRV35Q, FRV31, FR872, FR870, FRV34 [MA] 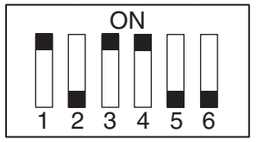 	[MA] PCG-FRV37, FRV35, FRV35Q, FRV31, FR872, FR870, FRV34 [MA] 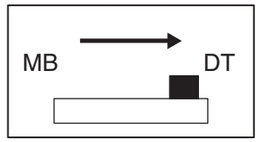 PCG-FRV33 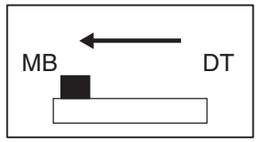
EU	PCG-FR395EP, FR315B PCG-FR315S, FR315M 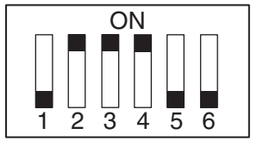 	PCG-FR315B, FR315M, FR315S, FR395EP 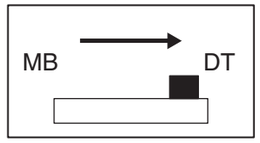
AO	[MA] PCG-FR825L, FR820S, FR820L, FR820, FR820C [MA] [MA] [MA] PCG-FR825SP, FR825P, FR825CP 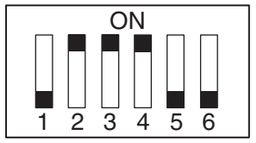 	[MA] [MA] PCG-FR825SP, FR825P, FR825CP 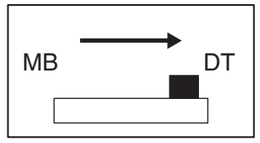 [MA] PCG-FR825L, FR820S, FR820L, FR820, FR820C [MA] 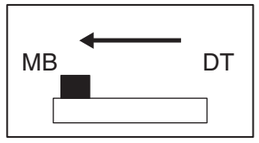

Confidential

CHAPTER 5.
OTHERS

5-1. The barcode label

The hatched portion of the barcode label is used as the repair data.

5-1. バーコードラベルについて

バーコードラベルの見方

バーコードラベルの網掛け部は，修理データとして使用いたします。

[MBX-88 Board] (Side A)

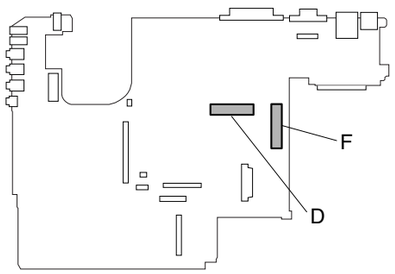

[BATTERY] (Bottom)

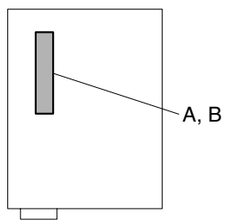

[DVD+-RW Drive] (Made by So) (Top)

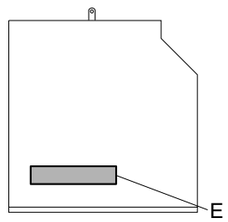

[MBX-88 Board] (Side B)

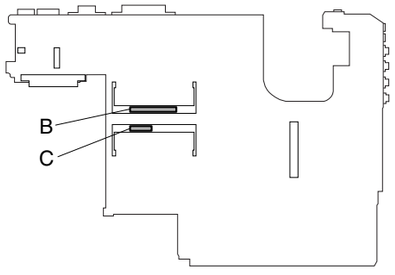

[FDD] (Bottom)

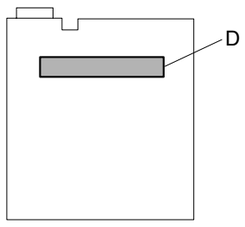

[DVD-RW Drive] (Made by Pa) (Top)

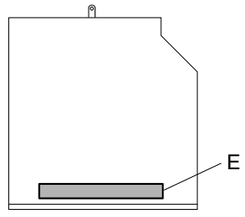

[Modem Card]

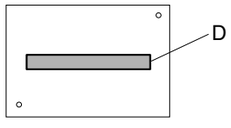

[HDD] (Made by I) (Top)

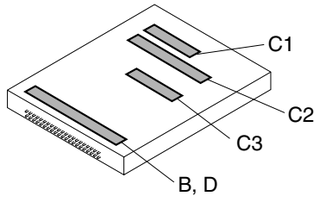

[Combination Drive] (Made by QSI) (Top)

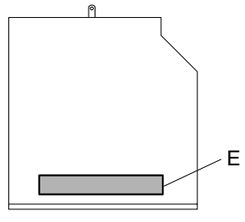

[KEY BOARD] (Bottom)

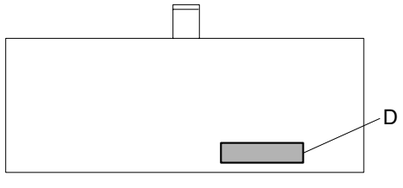

[LCD Unit (15-inch XGA Clear Black) (HI)] (Rear)

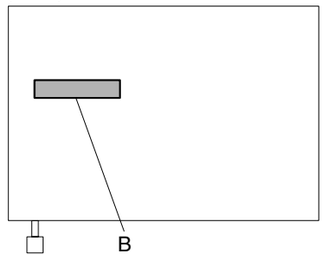

[LCD Unit (15-inch XGA) (AU)] (Rear)

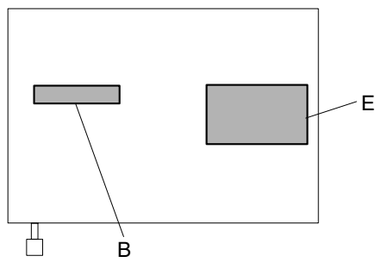

[LCD Unit (15-inch XGA) (SH)] (Rear)

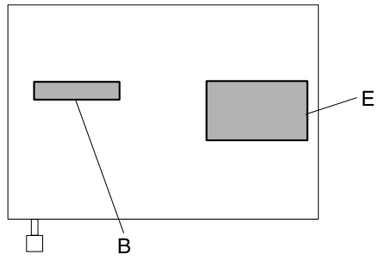

A	:	Parts No.
B	:	Serial No.
C	:	Revision No.
D	:	Product code
E	:	Maker Barcode
F	:	Global User ID (iLink)
G	:	Mac Address
▭	:	Barcode

5-2. Replacing the CPU

1. Removing the CPU

① Insert a flat-blade screwdriver into the notch as shown in the illustration and rotate it so that the protrusion comes to the lock release position.

② Pull the CPU gently upward to lift it out of the CPU socket.

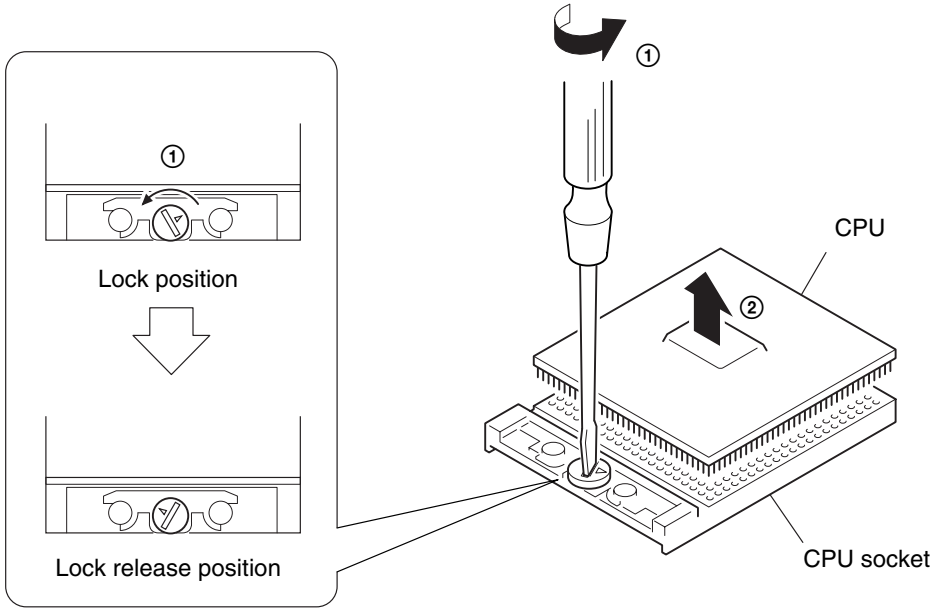

2. Installing the CPU

① Align the triangle reference mark of the CPU with that of the CPU socket and insert all the pins of the CPU to the corresponding holes of the CPU socket.

② While pressing the two positions marked by ○, insert the flat head (-) screwdriver into the specified position and rotate the screwdriver to the LOCK position.

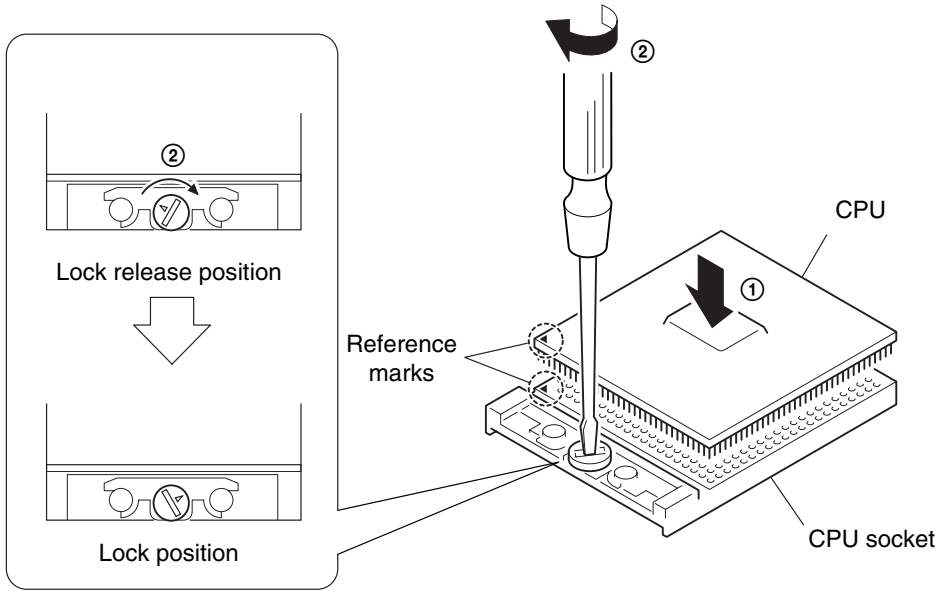

NOTE:

Rotate a flat-blade screwdriver to the lock position securely. If not, the operation of the CPU may become unstable.

List of PCG-FR Series (As of July, 2004)

Service Manual Part No.	Model Name			
	J	AM	EU	AO
9-876-045-XX	PCG-FR33 PCG-FR33/B PCG-FR55/B			
9-876-046-XX		PCG-FR130		
9-876-048-XX		PCG-FR780		
9-876-047-XX			PCG-FR102 PCG-FR105	
9-876-050-XX				PCG-FR700
9-876-051-XX				PCG-FR700S
9-876-049-XX				PCG-FR700H
9-876-099-XX			PCG-FR215E PCG-FR215H PCG-FR285E	
9-876-300-XX				PCG-FR720
9-876-301-XX				PCG-FR720S
9-876-302-XX				PCG-FR720L
9-876-303-XX	PCG-FR55E PCG-FR55E/B PCG-FR77E/B			
9-876-304-XX		PCG-FRV23 PCG-FRV25 PCG-FRV26 PCG-FRV27 PCG-FRV28		
9-876-305-XX		PCG-FR860 PCG-FR862		
9-876-308-XX		PCG-FRV25Q		
9-876-306-XX			PCG-FR215M PCG-FR215S PPCG-FR285M PCG-FR295MP	
9-876-307-XX				PCG-FR800C

Service Manual Part No.	Model Name			
	J	AM	EU	AO
9-876-342-XX	PCG-FR55G PCG-FR55G/B PCG-FR55R/P PCG-FR77G/B	PCG-FRV31 PCG-FRV33 PCG-FRV34 PCG-FRV35 PCG-FRV35Q PCG-FRV37 PCG-FR870 PCG-FR872	PCG-FR315B PCG-FR315M PCG-FR315S PCG-FR395EP	PCG-FR820 PCG-FR820C PCG-FR820L PCG-FR820S PCG-FR825CP PCG-FR825L PCG-FR825P PCG-FR825SP

This manual and the constituent data may not be replicated, copied nor reprinted in whole or in part without prior written authorization of Sony Corporation.

本マニュアルの一部，または全部について，無断でデータの複製，複写，転載することを禁じます。

9-876-342-05

Sony Corporation

English/Japanese
2004G1600-1
© 2004 Sony Corporation
Published by Sony EMCS VAIO-GSC [N]

Revision History

Suffix	Ver.	Date	Contents	QM No.
-01	Ver. 1	2003.09.26	First Edition	
-02	Ver. 2	2003.10.03	△1 **Page 4-8**	N2003_074CK
-03	Ver. 3	2003.10.20	△2 **Front Page (Model Line Up), Page1-1, Page 4-1 - 4-4, Page 4-8 - 4-9, Back Cover**	N2003_075AK
-04	Ver. 4	2003.11.06	△3 **Front Page (Model Line Up), Page1-1, Page 4-1 - 4-4, Page 4-8 - 4-9, Back Cover**	N2003_086AK
-05	Ver. 5	2004.07.08	△4 **Page 4-2**	N2004_076CK

< Remarks >